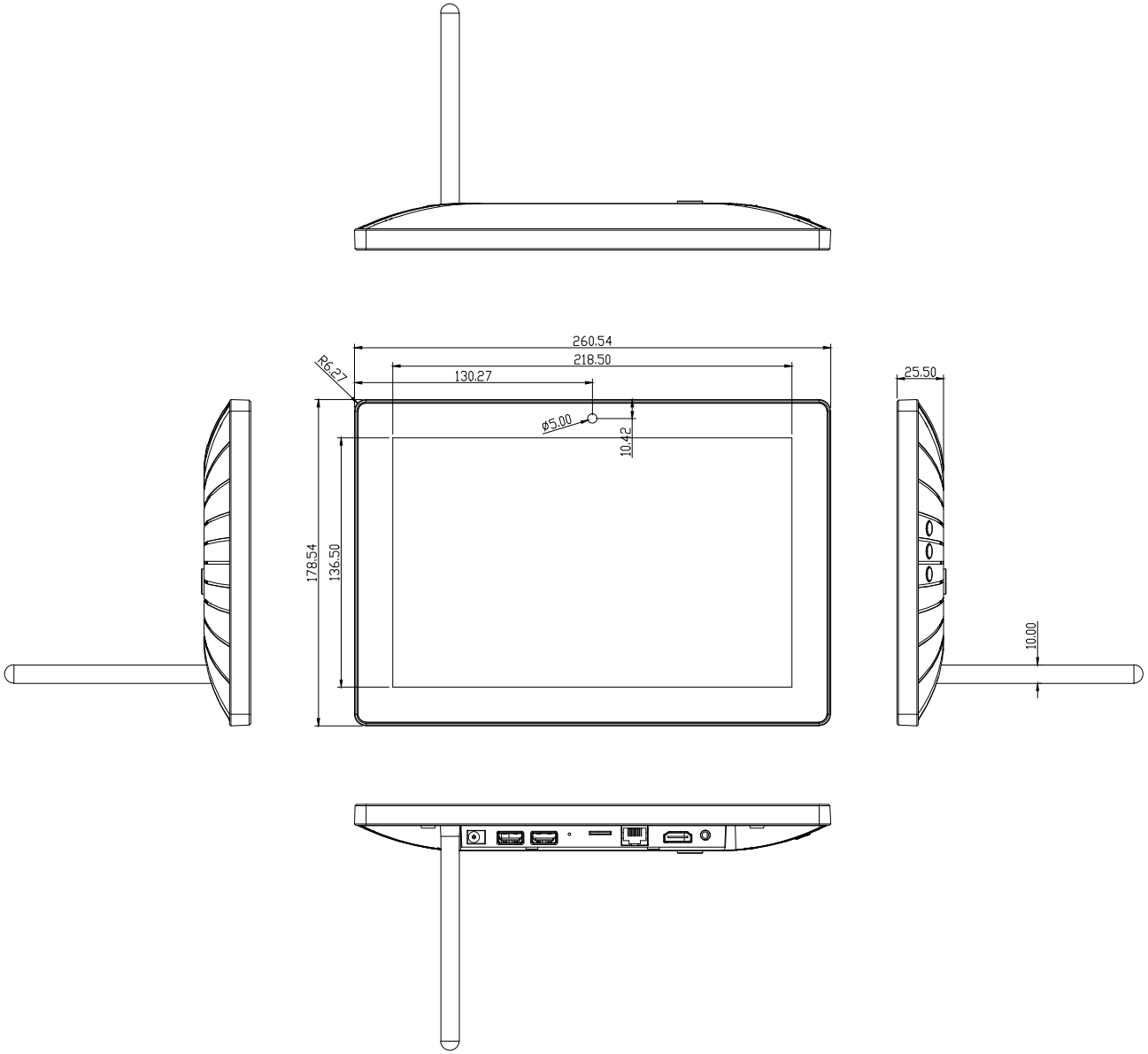
260.54
218.50
130.27
R6.27
ø5.00
10.42
178.54
136.50
25.50
10.00

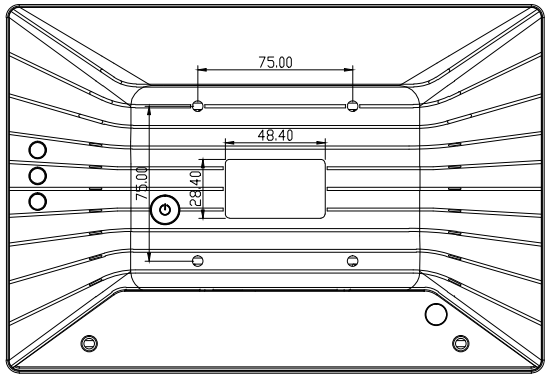
75.00
48.40
75.00
28.40