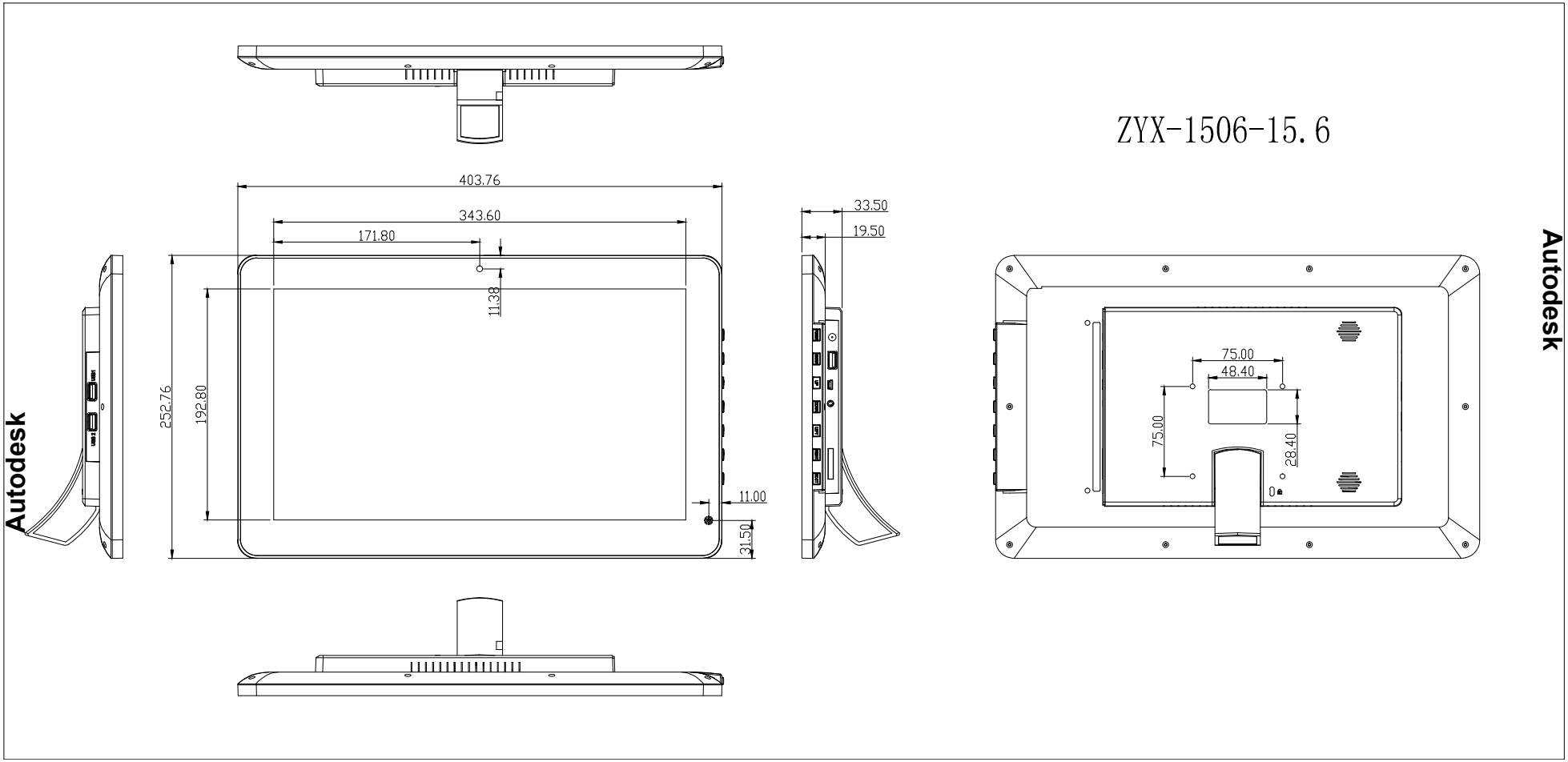
ZYX-1506-15.6
403.76
343.60
171.80
11.38
252.76
192.80
11.00
31.50
33.50
19.50
75.00
48.40
75.00
28.40
Autodesk
Autodesk