10" 14" 21" POE Android 6.0 PC

Spezifikation	
Model No.	ALLNET PoE Tablet
Product description	Android Tablet, white, without battery
CPU	A64
RAM / SSD	2GB / 16GB
operating system	Android 6.0
resolution	14/21 inch 1920 * 1080 Full HD / 10 inch 1280 x 800 IPS Panel
brightness	300-350cdm2
viewing angle	175
installation	Optional table holder or wall bracket, stand in delivery.
Ethernet	WIFI / Bluetooth / Ethernet cable (POE support)
interface	USB Hostx3, RJ-45, Direct Current, Headphone Jack, SD PORT
multimedia	Video (HD), Audio, Picture (HD), 2X3W stereo speakers
Power Supply PoE	PoE 802.3 af with 15.4 watt/ 21 inch 802.3 at
certificate	CE, ROHS, FCC
VESA HOLE	10/14 Zoll 75X75 MM / 21 "with 100X100MM
Functions Options	Camera, software, Bluetooth support.
Input / Output	110-240V / 12V (3A) with CE standard plug, standard PoE
camera	2M pix camera
screen	16:9 widescreen
contrast	1,000:1...
	10 / 14 / 21.5 (inch)
weight	1.2kg, 2.5kg, 7,5kg

Details Photo

Dimensions:	L x B x H in MM
10 Inch	259 x 178 x 21
14 inch	355 x 228 x 32
21 inch	538 x 332 x 37

Engineer photo	POE Android 6.0 p

Z series product diagrams

(Size:13.3”/14”/15.6”/18.5”/21.5”/23.6”/27”/32”)
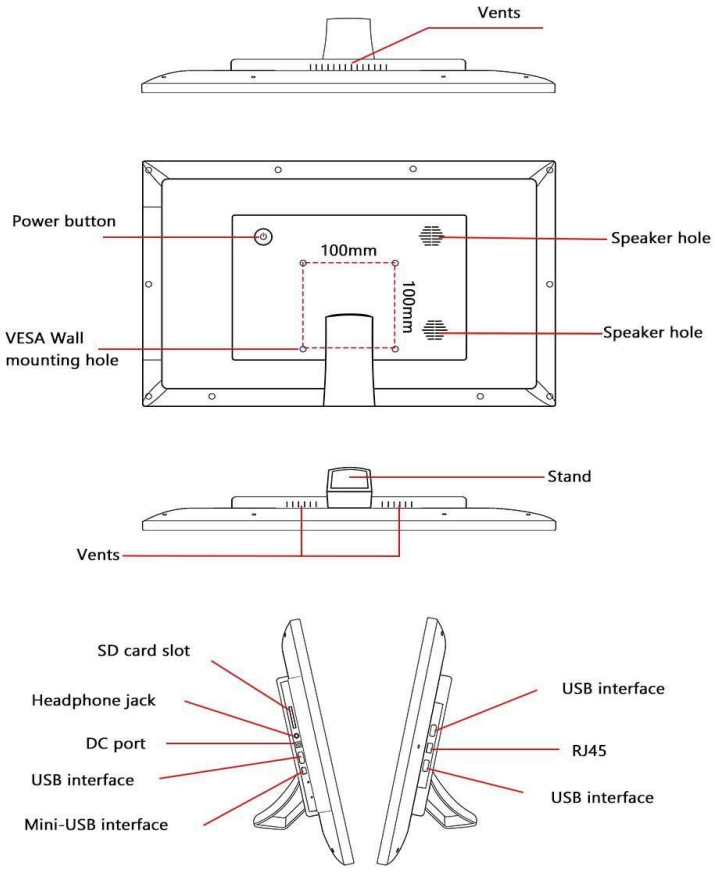
Remark: 75x75MM VESA FOR 10.1/13.3/14/15.6/18.5 inch ,100X100MM VESA FOR 21.5 inch and bigger size.